Panel

by Steve Jones

innermost®

Panel 75

USA PP079340XX

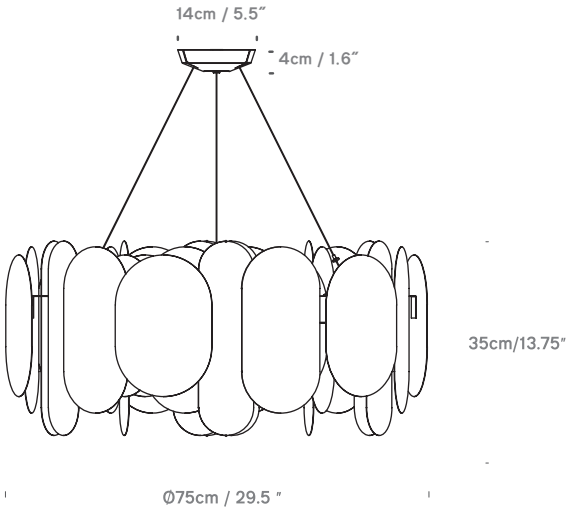

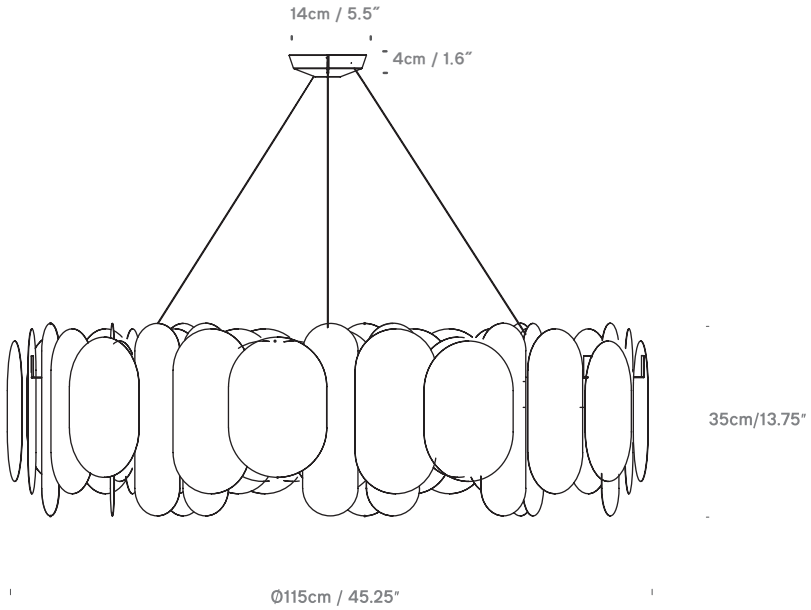

Panel 115

USA PP079360XX

Colour + EAN/UPC Code

10 -Bronze
UPC
75: 816827022633
115: 816827022602

30 -Brass
UPC
75: 816827022640
115: 816827022619

31 -Gun Metal
UPC
75: 816827022657
115: 816827022626

CUSTOM Colours

Category	Pendant / Ceiling Mount
Material	Stainless Steel
Cable	13 ft / Clear PVC
Lightsource	75: 12xG9 / 115: 24xG9 Max 5W LED
Switched	No
Class	cETLus - Class I
ADA-Compliant	Yes - if installed in compliance with ADA307.

Location Rating	IP20 / Dry Locations
Fitting	4" Octagon Box / No Cutout Needed
Weight	75: 25 lbs / 115: 46.3 lbs
Shipping Carton Size (wooden crate)	75: 36.7" x 36.7" x 21.7" 115: 47.2" x 47.2" x 21.7"
Shipping Carton Weight	75: 65.5 lbs 115: 121.3 lbs

LED Chip	Lamp Dependant
Wattage	Lamp Dependant
Luminous Flux	Lamp Dependant
Colour Temp	Lamp Dependant
CRI	Lamp Dependant
Lifetime	Lamp Dependant
LDT / IES Files	Not Currently Available
Dimmable	Lamp Dependant

Recommended Bulb

LED G9 dimmable bulb up to 500 lumen output and colour temperature from 2200K to 2700K. Please contact us about supply.

Smart Compatibility

This product is compatible with most Bluetooth/ Wifi systems. Please contact us about the Tuya + Cassambi options we can offer.

Innermost Limited, Shropshire, UK.
www.innermost.us info@innermost.us

US Distribution: IMDC
+1888 899 IMDC [4632]

Canada Distribution: LIGHTFORM
+1 866 526 7232

Intertek

Member of theLIA

LIAQA ASSURED COMPANY